FLUVAL POND

PRESSURE-FLO

INSTRUCTION MANUAL

PRESSURIZED UV POND FILTER

Table of Contents

1. IMPORTANT SAFETY INSTRUCTIONS 3
2. WHAT'S INCLUDED 4
3. INTENDED USE 5
4. HOW PRESSURE-FLO FILTERS WORK 5
5. BACKWASH-CLEANING SYSTEM 6
6. CLEANING INDICATOR 6
7. INSTALLATION - LOCATION OF THE FILTER 7
8. HOSE CONNECTIONS 7
9. FILTER START-UP, OPERATION AND BACKWASH CLEANING 7
10. FILTER START-UP AND OPERATION 8
11. BACKWASH-CLEANING SYSTEM 9
12. CLEANING AND MAINTENANCE OF THE PRESSURE-FLO FILTER 10
13. FOAM AND BIOLAVA CLEANING 10
14. CHANGING THE UVC BULB AND CLEANING THE QUARTZ SLEEVE 11
15. WINTER STORAGE 12
16. FILTER WET TEST 12
17. CALCULATE THE SIZE OF YOUR POND 13
18. HOW TO CHOOSE THE RIGHT PRESSURE-FLO FILTER FOR YOUR POND 13
19. RECYCLING 14
20. FOR AUTHORIZED WARRANTY REPAIR SERVICE 14

1. IMPORTANT SAFETY INSTRUCTIONS

WARNING - To guard against injury, basic safety precautions should be observed, including the following:

1. READ AND FOLLOW ALL SAFETY INSTRUCTIONS And all the important notices on the use and maintenance of this appliance. Disregarding this advice may result in damage to the appliance or personal injury.

- **DANGER** - To avoid possible electric shock, special care should be taken since water is employed in the use of pond equipment. For each of the following situations, do not attempt repairs yourself; return the appliance to the store where it was purchased if still under warranty:
- This is a weather-proof but NOT a submersible product. Do not immerse the product in water! If the appliance falls into the water, DON'T reach for it. First unplug it and then retrieve it.

2. Prior to installing the unit, check the quartz glass sleeve and the UVC lamp have not been damaged during transportation, as the UV lamp (B) and the quartz sleeve (C) are made of glass. Handle them with care. Do not touch UV lamp with bare hands as this will impede its performance.
- If the appliance shows any sign of abnormal water leakage or if RCD (or GFCI Ground Fault Current Interrupter) switches off, disconnect the power supply cord from mains (main power supply).
- Carefully examine the appliance after installation. It should not be plugged in if there is water on parts not intended to be wet. If electrical components of the appliance get wet, unplug the appliance immediately.
- Do not operate any appliance if it has a damaged cord or plug, if it is malfunctioning or if it is dropped or damaged in any manner. The power cord of this appliance is a special cord; if it is damaged, it must be replaced by an authorized Royal Pond service facility or similar qualified person in order to avoid any hazard. Never cut the cord.

3. **WARNING** - This appliance contains a UVC emitter. Direct exposure to UVC can damage eyes and skin. Do not operate the UVC emitter when it is removed from the appliance enclosure.
4. **WARNING** - This appliance can be used by children aged from 8 years and above and persons with reduced physical, sensory or mental capabilities or lack of experience and knowledge if they have been given supervision or instruction concerning use of the appliance in a safe way and understand the hazards involved. Children shall not play with the appliance. Cleaning and user maintenance shall not be made by children without supervision.
5. To avoid injury, do not touch moving parts or hot parts.
6. **CAUTION** - Always unplug or disconnect all appliances in the pond from the electrical supply before placing hands in water, before putting on or taking off parts and while the equipment is being installed, maintained or handled. Never yank the cord to pull the plug from outlet. Grasp the plug and pull to disconnect. Always unplug an appliance from an outlet when not in use.
7. This is a filter unit complete with integrated UV clarifier for outdoor freshwater garden ponds. Do not use this appliance for other than its intended use. Unintended use of the appliance or damage to the housing may result in the escape of dangerous UVC radiation. UVC radiation may, even in little doses, cause harm to the eyes and skin.
- Do not use this product in swimming pools or other situations where people are immersed;
- This product is suitable for use in water temps from 4 °C to 35 °C;
- Do not use this product with inflammable or drinkable liquids.
- The use of attachments not recommended or sold by the appliance manufacturer may cause an unsafe condition and will invalidate your warranty.

8. Do not install or store the appliance where it will be exposed to temperatures close to 0 °C (32 °F) or below. In freezing conditions, disconnect the power supply to the filter and drain water from the filter canister. In winter, remove and store the appliance in a sheltered place.
9. Shelter appliance also from direct sunlight. The materials have high stability to sunlight but direct rays may overheat and speed up aging.
- To avoid overheating, do not place objects on the filter.
- This product should not be placed where it can fall into the water. Do not install it in an area where flooding can occur or where water can accumulate. It should be placed at least 1 m/3.2 feet from the edge of the garden pond, in a dry and protected place, with sufficient ventilation around it. Be sure that there is enough room around it for maintenance operations.

10. **IMPORTANT** - The maximum operating pressure is 0.04 Mpa / 0.4 bar / 5.8 PSI with PF4500/8000; 0.05 Mpa / 0.5 bar / 7.3 PSI with PF 14000/21000. Do not connect power filter to the water mains.
11. Do not attempt to open the lid clamp (O) and lift the lid when the appliance and the filters are in operation. The lid clamp latch features a safety metal insert to prevent accidental opening.
12. If an extension cord is necessary, ensure connection is waterproof and dust proof. A cord with proper rating should be used. A cord rated for less amperes or watts than the appliance rating may overheat. Care should be taken to ensure the cord will not be tripped over or pulled. The connection should be carried out by a qualified electrical installer.
13. **IMPORTANT** - Electrical connection must be in accordance with data on the rating label; the appliance can be operated only after having been correctly installed. The electrical safety is guaranteed only when the item is connected to a residual current device (RCD) or Ground Fault Circuit Interrupter (GFCI) having a rated residual operating current not exceeding 30 mA.
14. **WARNING** - Do not connect power to filter unless filter is fully and correctly assembled. Never use the product without water. The filter must always be fully filled with water when operating.
15. **WARNING** - Risk of electric shock **(SPECIAL INSTRUCTIONS FOR USA AND CANADA ONLY).** This appliance is equipped with a grounded, type 3-wire cord (3-prong plug). This plug will only fit into an electrical outlet made for a 3-prong plug. This is a safety feature. If the plug should fail to fit the outlet, contact an electrician to replace the outlet. Do not attempt to defeat the safety purpose of the grounding pin part of the 3-prong plug. Ensure that it is connected only to a properly grounded RCD or GFCI equipped receptacle rated at 30mA.

WARNING – Do not bury cord. Locate cord to minimize damage from lawn mowers, hedge trimmers and other equipment. Permanent installations to the main power supply (hard wiring), must comply with local authority regulations, which may stipulate the use of plastic or metal conduit to protect the cable.

For U.S.A. and CANADA only – To reduce the risk of electric shock, use only on portable self-contained fountains.

SPECIAL INSTRUCTION FOR U.K.:

IMPORTANT – This product is supplied without plug and is designed to be permanently wired to the mains supply; the connection must be made in a dry, weatherproof enclosure through the use of a double pole switched fused, incorporated in the fixed wiring in accordance with the wiring rules and having a contact separation in all poles that provided full disconnection under overvoltage category III, which complies to BS3676 fitted with a 3 amp fuse. The installation must conform to the regulations of the Local Electricity Authority which could include the use of plastic or metal conduit to protect the cable. A 30mA Residual Current Device (RCD) must be fitted to the mains supply.

WARNING: THIS APPLIANCE MUST BE EARTHED. IMPORTANT – The wires in the mains lead are coloured in accordance with the following code: BROWN-LIVE • BLUE-NEUTRAL • GREEN/YELLOW-EARTH

- The Brown lead should be connected to the live terminal, which may be marked with an 'L' or coloured brown or red.
- The Blue lead should be connected to the Neutral terminal, which may be marked with an 'N' or coloured blue or black.
- The Green/Yellow lead should be connected to the Earth terminal which may be marked with an 'E' or coloured green or yellow.
- The cord should be protected from abrasion, cuts or any other damage.

SAVE THESE INSTRUCTIONS FOR FUTURE REFERENCE

2. WHAT'S INCLUDED

Refer to these illustrations when reading the instruction manual.

A UVC Head
B UVC Bulb
C Quartz Sleeve
D O-Rings
E Retaining Flange
F UVC Head O-Ring
G Filter Lid
H Universal Click-Fit
I Sealing Cap Click-Fit
J Head Screws
K Quartz Sleeve
Flange Screws
L Foam Cleaning Blades
M Foam Filters
N Foam Support Frame
O Lid Clamp
P Filter Lid O-Ring
Q Filter Case
R Bulb Indicator
S Cleaning Handles
T Drain Outlet
U Cleaning Indicator
V Mode Selector Switch
W Water Outlet
X Water Inlet
Y Bulb Damper
Z Safety Lock
aa Rubber O-Rings
bb BioLava

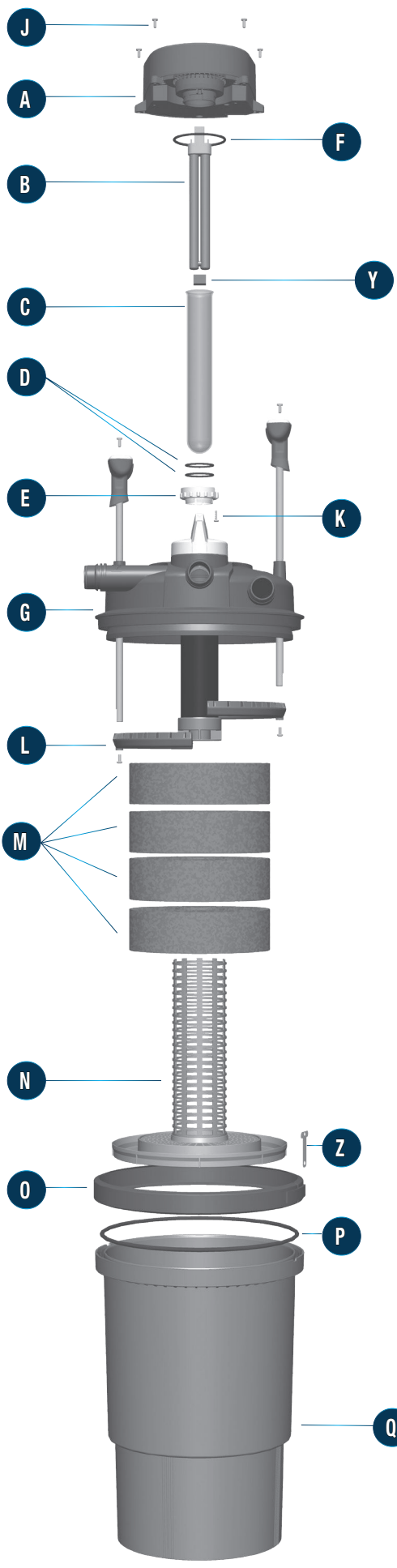

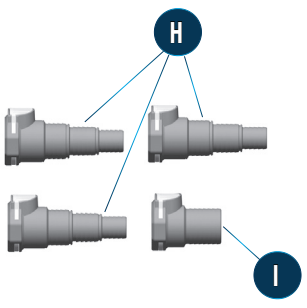

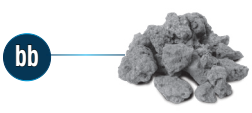

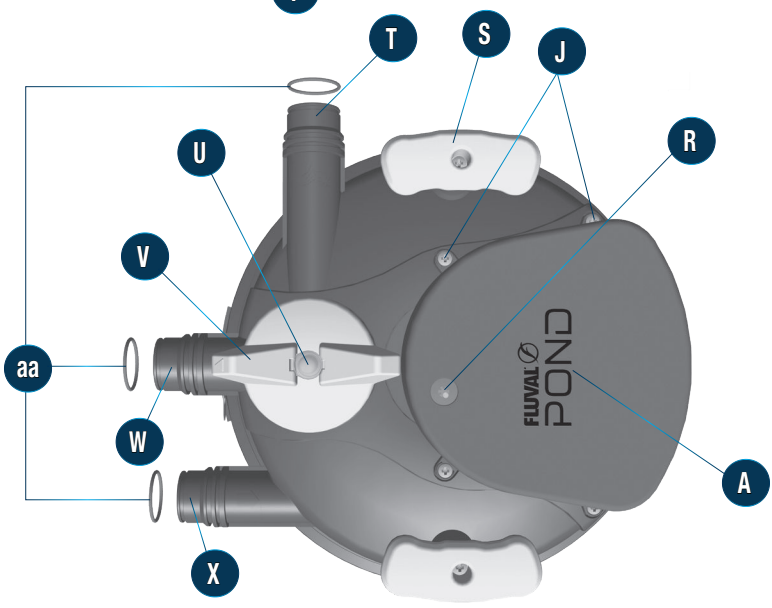

3. INTENDED USE

The Pressure-Flo filter is a sealed pressure filter with an integrated UVC clarifier designed to provide mechanical and biological filtration in outdoor fresh water ornamental ponds with a temperature from +4°C to 35°C (+39.2° to 95° F), with or without fish. The purpose of mechanical filtration is to trap and accumulate debris and waste material coming from the pond. The purpose of biological filtration is to convert toxic by-products of fish metabolism and other organic waste into much less harmful substances. The purpose of UVC filtration is to inhibit single-celled algae growth.

4. HOW PRESSURE-FLO FILTERS WORK

Pressure-Flo Filters are designed to provide three important water filtration operations that are essential for keeping pond water clear and healthy: mechanical and biological filtration, and UVC clarification. The filters are designed to work with Fluval Pond Max-Flo circulating pumps. With the filter connected to the outlet of a pump, water enters the unit through water inlet (X). It is then forced to pass through the mechanical filtration stage, consisting of foam filters that intercept and trap dirt and debris. Next, water reaches the biological filtration* chamber where it comes into contact with beneficial bacteria. Finally, dirt-free water passes along the UVC bulb unit (B), where it is exposed to UV rays that inhibit algae growth. Water then returns to the pond through outlet (W).

*Pressure-Flo 1200 / 4500 UVC does not feature biological filtration.

5. BACKWASH-CLEANING SYSTEM

During operation, coarse debris is captured at the surface captured at the surface of the foam filters. As a result, over time, the external surface of the foam filters will clog and hinder proper filtration, because of reduced water flow. The limited water flow through the foam filters reduces the effectiveness of both the biological and UVC filtration. This condition can easily be detected thanks to the cleaning indicator (U). Pressure-Flo filters feature a unique Backwash-cleaning system that completely cleans the entire surface of the mechanical foam filters. The complete cleaning operation can easily and comfortably be done in a few minutes with no need to open the unit. Cleaning will ensure that the filter will perform at optimal levels. Though the Backwash-Cleaning System prolongs the time between maintenance sessions, thorough cleaning of the unit is necessary periodically. See Cleaning and Maintenance of the Pressure-Flo Filter for more details.

6. CLEANING INDICATOR

This unit features a cleaning indicator (U), which lets you know when the filter needs backwashing or thorough cleaning. The height of the red cleaning indicator is approximately proportional to the filter clogging level. When the red indicator is low, the filter is clean. When the red indicator is fully exposed, the filter needs cleaning. The cleaning indicator may be affected by many variables, such as waterfall height and pump performance, the length and diameter of the hose and hosing kinks or bends. Its operating characteristics have been calibrated according to specific application conditions. Different application conditions may lead to different results.

7. INSTALLATION - LOCATION OF THE FILTER

Choose a suitable location for your Pressure-Flo filter, keeping in mind the following recommendations:

- Place the Pressure-Flo Filter on a firm and level base, where it is safe from flooding and has enough ventilation. Protect the appliance from direct sunlight.
- Place either above ground or buried with the lid clamp (O) at least 2” / 5 cm above ground level.
- To avoid overheating, do not cover the filter.
- Place the filter at least 3.2 ft / 1 m from the pond edge and make sure it cannot fall into the water in any way.
- Make sure you have full access to the lid of the unit for maintenance.
- Do not operate the filter with a water pressure greater than 0.4 bar or 5.8 PSI with PF1200 / 4500 and 2100 / 8000, 0.5 bar or 7.3 PSI with PF 3500 / 14000 and 5000 / 21000. Never connect the filter to public water works.
- Orient the filter so that the water inlet (X), water outlet (W) and drain outlet (T) point in the desired directions to avoid sharp bends in the hosing.

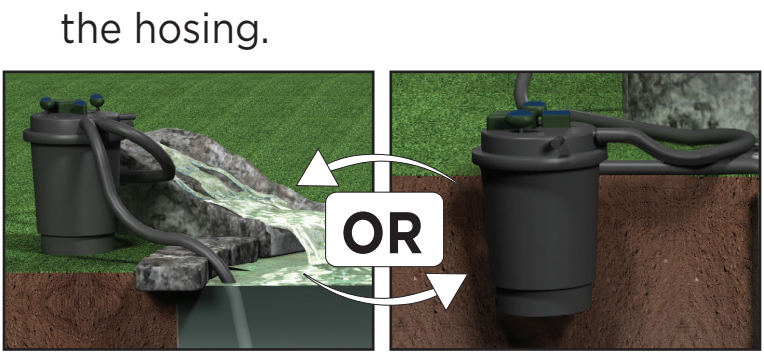

8. HOSE CONNECTIONS

Pressure-Flo filter requires the connection of 3 hoses (not included): one for the inlet of the unit (from the pond pump), one for the outlet which takes filtered water to the pond, and one for discharging dirty water from the filter to a location outside the pond during maintenance. When selecting and installing the hoses for your application, maximize potential flow by choosing the largest diameter and shortest hosing possible and avoiding kinks and sharp bends. Pressure-Flo Filters are equipped with click-fit couplings, which will make connecting and disconnecting the hosing fast and easy.

Connect flexible hoses to Click-Fit couplings and secure them with an adequate hose clamp (not included). When flexible hoses are securely connected to Click-Fit couplings, you can disconnect hosing from the unit simply by pushing the Click-Fit coupling button and pulling. To connect Click-Fit couplings to the unit, insert them onto the male connectors located on the lid of the unit and ensure that the coupling button comes up fully.

IMPORTANT – Universal Click-Fit couplings (H) allow the connection of different diameter flexible hosing, but it is important to cut off the unused smaller diameter hose-tails to avoid flow restrictions.

Water Inlet (X): the Water Inlet is where pond water enters the Pressure-Flo filter. Simply connect the outlet of a Fluval Pond Max-Flo solids handling pump to the Pressure-Flo inlet (X) using non-kink hosing. The pump delivers dirty water from the pond to the Pressure-Flo filter.

Water Outlet (W): the Water Outlet returns filtered water to the pond when the filter is operating in filtering mode. Hosing attached to the water outlet (W) can be placed directly in the pond or used to create a watercourse or waterfall. This outlet is activated when the Mode Selector Switch (V) is pointing at the water outlet (W) (Filtering Mode). The end of the outlet hosing should be placed as far away from the pump inlet as possible to maximize water circulation in the pond.

Drain Outlet (T): the Drain Outlet is where dirty water exits the filter when using the Backwash-Cleaning System. Connect a hose to the Drain Outlet to allow dirty water to drain out of the filter and into your garden (See Tip below). This outlet is activated when the Mode Selector Switch (V) is pointing at the Drain Outlet (T) (Drain Mode).

IMPORTANT – During normal “Filtering Mode” operation, close the Drain Outlet (T) using the Click-Fit Sealing Cap (I).

Tip: dirty pond water is nutrient-rich and chlorine-free and is particularly good for watering the garden.

9. FILTER START-UP, OPERATION AND BACKWASH CLEANING

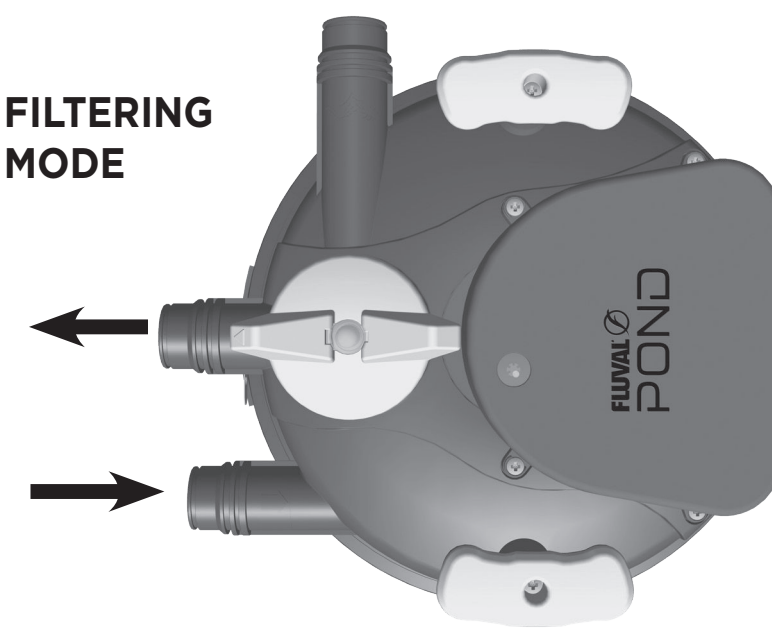

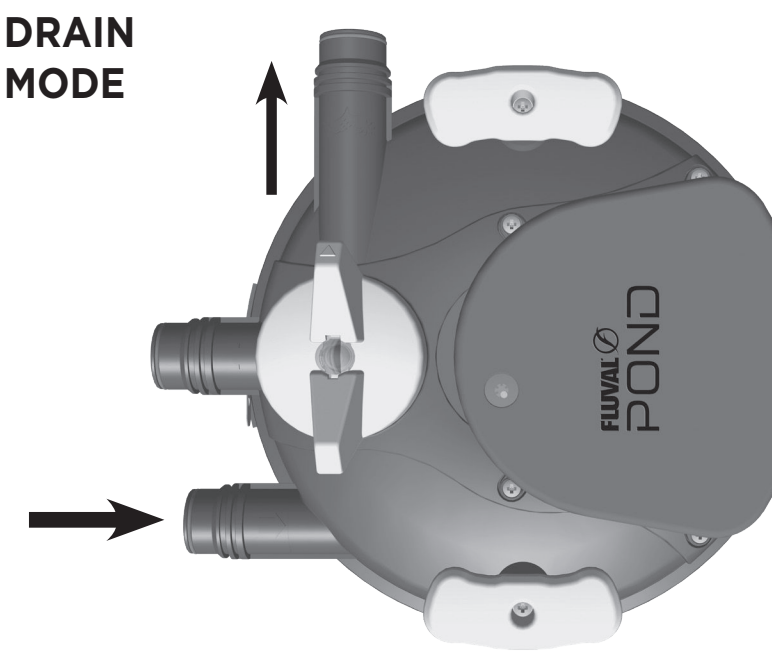

10. FILTER START-UP AND OPERATION

IMPORTANT! – Before starting the filter for the first time and after each cleaning, verify the following:

- Before the first start-up, it is necessary to install the lid O-ring (P), which is supplied in a separate poly bag. This O-ring must be correctly inserted in its seat at the top of the filter canister **(Fig. 1)**.

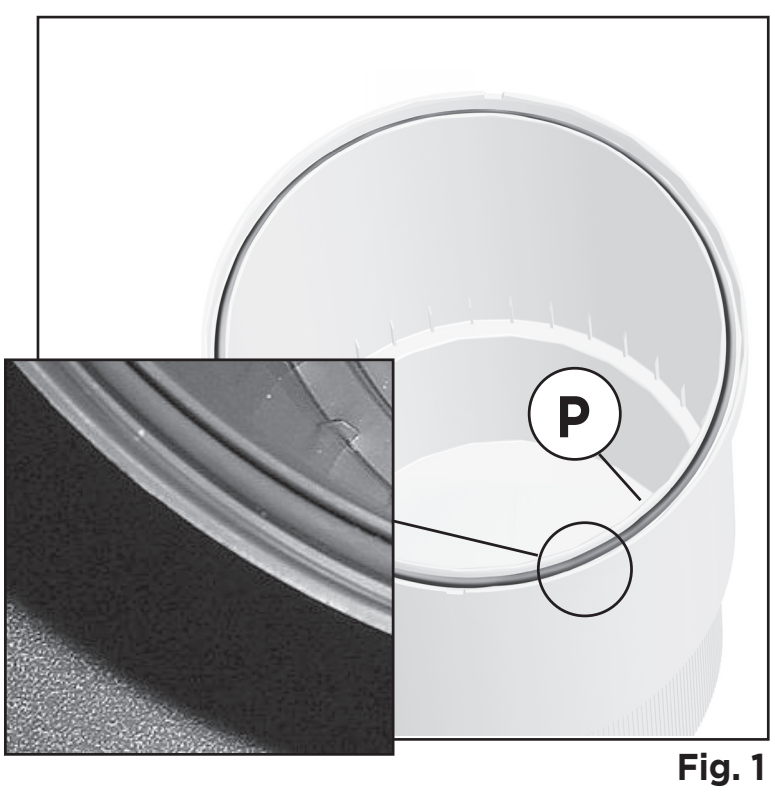

Fig. 1

- This filter comes with the UVC bulb already installed. Before connecting the filter to the power supply, it is necessary to perform the Filter Wet Test. Refer to the section "Changing the UVC Bulb and Cleaning the Quartz Sleeve" for detailed instructions.
- The BioLava must be placed in the Filter Case as indicated in the picture (except Pressure-Flo 1200 / 4500 UVC) **(Fig. 2)**.

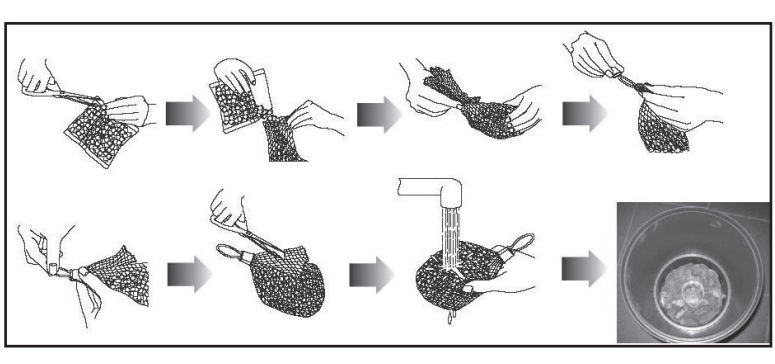

Fig. 2

- Ensure that the lid (G) is securely closed with the lid clamp (O) and the lid O-ring (P) correctly sitting in its seat. **IMPORTANT:** Before applying the lid clamp (O), the lid (G) must be pressed down until the gap between lid and filter case is eliminated. The lid clamp must be latched, with the safety metal lock (Z) inserted correctly inside the latch slot **(Fig. 3)**.
  WARNING: Pay attention not to catch your fingers or the line cord, while latching the lid clamp. A padlock (not included) can be inserted in the bottom hole of the safety lock (Z) to secure it if necessary.

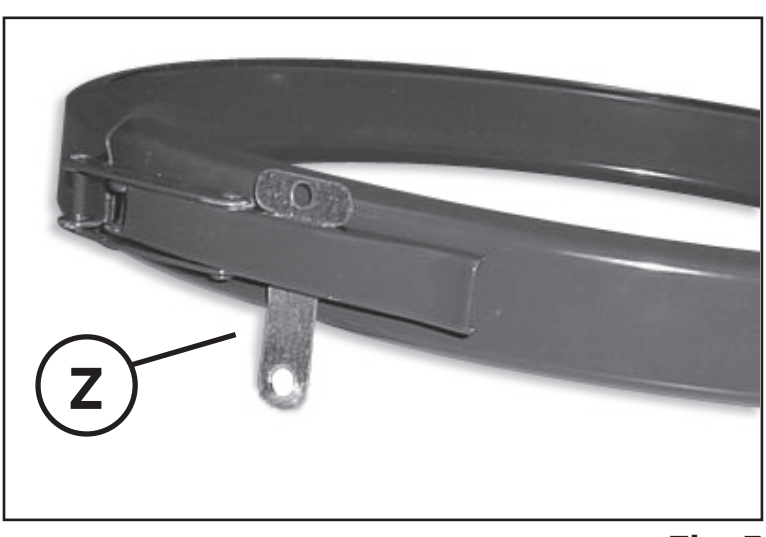

Fig. 3

- The Mode Selector Switch (V) must be set to the "Filtering Mode" position with the switch pointing at Water Outlet (W). Mode selector (V) must be fully turned 90°; do not set it at intermediate positions.
- Ensure that all hoses have been securely connected to the unit and placed in their final position. Ensure that the male section of all Click-Fit couplings is equipped with the rubber O-Ring (aa).

During normal "Filtering Mode" operation, close the Drain Outlet (T) using the Click-Fit Sealing Cap (I). Always ensure that the Click-Fit Sealing Cap is securely locked in place (push button should be flush).

CAUTION – Do not operate the UVC bulb (B) without water flowing through the unit. After the above verifications, proceed as follows:

1. Turn on the pump and run the filter for several minutes to check that there are no water leaks
2. If everything is OK and water regularly flows through the unit, plug the Pressure-Flo UVC bulb into the power supply. The UV bulb indicator (R) lights up with a blue shimmer when the UVC is operating; this light can be better viewed after dusk. Keep the filter working for 24 hours a day and ideally all year round, provided that there is no frost and water can flow freely through the unit.

11. BACKWASH-CLEANING SYSTEM

When the foam surface becomes clogged, the Backwash-Cleaning System quickly and efficiently restores normal filter operation without having to open the unit. Cleaning should be done at least weekly or whenever the cleaning indicator (U) detects that the filter is clogged or dirty or when cloudy water comes out of the filter. If the pond is very dirty and during the first weeks the unit is used, the filter may need more frequent cleaning. Proceed as follows:

1. Turn off the power to the pond pump.
2. Remove the Click-Fit Sealing Cap from the Drain Outlet (T). CAUTION: there will be a small flow of water coming out.
3. Connect the third Click-Fit supplied, cut it, and attach the hosing to the click fit to ensure it will expel the dirty water where desired.
4. Turn the Mode Selector Switch (V) to the Drain Mode position (point selector fully at drain outlet (T)). A small amount of water may continue to come out of the Water Outlet (W). This is normal. To avoid this, remove the Click-Fit from the Water Outlet and connect the Sealing Cap Click-Fit.
5. Turn on the power to the pond pump.
6. Slide both cleaning handles (S) up and down. The up-and-down sliding motion causes the cleaning blades to scrape against the surface of the foam filters, dislodging debris and suspending it in the outer chamber of the filter, where water loaded with the suspended debris is forced out of the filter through the Drain Outlet (T). Proceed for several minutes until you see clear water coming out through the drain hose.
7. CAUTION – The cleaning system uses pond water. This fact must be considered when using the cleaning feature. When cleaning is complete, refill the pond to the desired water level.
8. Turn off the power to the pond pump.
9. Turn the Mode Selector Switch (V) to the Filtering Mode position (selector fully pointing at Water Outlet (W)). The filter is now in normal filtering mode. A flow of cloudy water coming out for a few seconds is quite normal.
10. Seal the Drain Outlet (T) using the Click-Fit Sealing Cap (I). Ensure that it is securely locked in place (push button should be flush). If the cleaning indicator remains up at the end of this operation, inspect the Cleaning Indicator to see whether it is clean and unimpeded (refer to Foam and BioLava Cleaning, point 11, for detailed instructions).
11. Turn on the power to the pond pump. If the filter remains clogged at the end of this operation, perform Foam and BioLava Cleaning below.

12. CLEANING AND MAINTENANCE OF THE PRESSURE-FLO FILTER

- Do not attempt to open the lid clamp (O) and lift the lid when the pump and the filter are in operation.
- The lid clamp latch features a safety metal insert to prevent accidental opening.
- DO NOT ATTEMPT TO VIEW THE BULB WHEN LIT! Direct exposure to ultraviolet light can damage eyes and skin.
- The UVC bulb (B) and the quartz sleeve (C) are made of glass. Handle all parts with care.
- Make sure that the internal electrical parts of the appliance are dry before, during and after the maintenance operations.
- The Mode Selector Switch (V) simply diverts water but does not stop it.

13. FOAM AND BIOLAVA CLEANING

At the start of each season or when the Backwash-Cleaning System does not produce expected results it will be necessary to thoroughly wash or replace the foam filters (M). During the hot summer months, more frequent cleaning is required. During this operation, the BioLava can also be cleaned and/or replaced (except Pressure-Flo 1200 / 4500 UVC).

1. Switch off the UVC bulb (B) by disconnecting the unit plug from the main power supply.
2. Switch off the pump that supplies the Pressure-Flo Filter.
3. Disconnect all hosing from the unit by releasing the Click-Fit couplings (push the press button and pull).
4. Slowly lift the Cleaning Handles (S) up to their maximum extension above the filter.
5. Remove the safety insert from the metallic lid clamp (O). Unlatch the metallic lid clamp.
6. Remove the Lid (G) by grasping the cleaning handles or by gently levering into the side slots by means of an adequate flat headed screwdriver. **CAUTION:** do not force the guiding rods sideways as this may damage the unit. **CAUTION** – The lid integrates the UVC unit with the bulb and the quartz sleeve, which are made of glass. **HANDLE ALL PARTS WITH CARE!**
7. You now have access to the Foam Filters (M). Remove all of them together by grasping and lifting the internal Foam Support Frame (N).
8. Free the Foam Filters (M) from the Foam Support Frame (N) and rinse with pond water or replace them as required.
9. Rinse the BioLava located in the lower section of the Filter Case (Q) with pond water or replace as required. Pressure-Flo 1200 / 4500 UVC does not have a biological media chamber.
10. Clean the Filter Case (Q) with water, particularly around the top edge where the lid sealing O-ring (P) is seated.
11. If necessary, clean the Cleaning Indicator (U) after disassembling it as follows (the Mode Selector Switch (V) must be set to the "Filtering Mode" position): 1) remove the retaining ring by rotating it counterclockwise, 2) remove the indicator and its spring. Rinse all parts in water and reassemble them with care **(Fig. 4 - Fig. 5).**

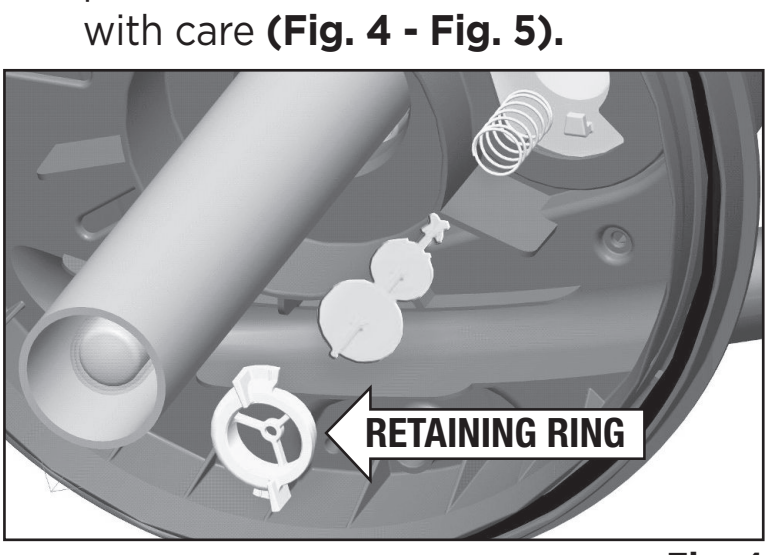

Fig. 4

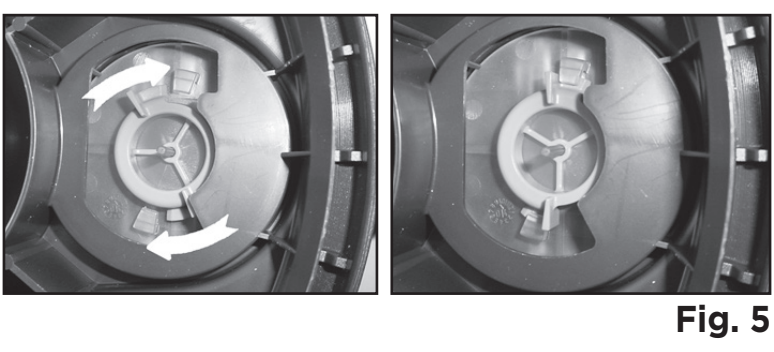

Fig. 5

NEVER use soap or detergents for cleaning. Any remaining traces may pollute the pond and result in damage to sensitive fish tissues.

12. Inspect and clean the two Cleaning Blades (L) and the guide rods. If necessary, replace the blades with new ones. Each blade can easily be detached from the guiding rod by unscrewing the screw in the middle.
13. Put the foam and BioLava back in their original locations. Ensure that the foam filters are properly stacked with no space between them.
14. Reassemble the unit with care. Make sure that the BioLava does not interfere with the foam support frame (N) and that the frame is refitted correctly.
15. The filter is now ready for start-up. Read and follow all instructions in Filter Start-up, Operation, and Backwash-Cleaning.

14. CHANGING THE UVC BULB AND CLEANING THE QUARTZ SLEEVE

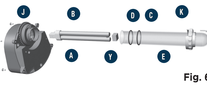

Fig. 6

Changing the UVC bulb: to maintain optimum performance, the UVC bulb (B) should be replaced every year. An ideal time is Spring, during pre-season pond maintenance.

Cleaning the Quartz Sleeve: although only filtered water passes through the UVC section of the Pressure-Flo filter, the quartz sleeve (C) can become coated with limescale, which will diminish the performance of the UVC bulb (B). It is recommended to check and clean the quartz sleeve (C) on a regular basis. The frequency of cleaning depends on pond conditions. In order to access the UVC bulb (B) and the quartz sleeve (C), proceed as follows:

1. Switch off the UVC bulb by disconnecting the unit plug from the main power supply.
2. Switch off the pump that supplies the Pressure-Flo Filter.
3. Disconnect all hosing from the unit by releasing the Click-Fit couplings (push the"press" button and pull).
4. Remove the UVC head (A) (**Fig. 6)** from the filter by unscrewing the 4 screws (J) that fasten the UVC head to the filter lid (G). UVC Head is equipped with anti-loss screws. You do not need to completely remove the screws. Just unscrew them until the UVC Head is disengaged.
5. At this stage it is possible to clean the quartz sleeve (C), if required. To clean the quartz sleeve, use a damp soft cloth to wipe away limescale and debris. In case of stubborn dirt, some vinegar may be used. Do not use detergents or other chemical cleaners. If it is not necessary to change the UVC bulb, go straight to point #10.
6. To access the UVC bulb (B), remove the Quartz Sleeve (C) by first unscrewing, about 3 turns, the security screw (K) of the Retaining Flange (E) that fasten it to the UVC head. Afterwards turn the Retaining Flange approx 30 deg counterclockwise until the screw is aligned with the arrow present in the UVC head and pull to disengage it from its place. Important: the Retaining Flange is equipped with one anti-loss safety screw. There is no need to remove the screw completely. Just unscrew the screw until the Retaining Flange is free to be turned and disengaged from its position.
7. Pull off the Quartz Sleeve including the O-Rings by exerting a slight rotary movement.
8. Once the Quartz Sleeve is removed, pull out the UVC bulb (B) away from the bulb holder and replace it with a new one. **WARNING - DO NOT ATTEMPT TO VIEW THE BULB WHEN LIT!** Direct exposure to ultraviolet light can damage eyes and skin. Do not test the UVC bulb unless the filter is fully assembled and closed. **IMPORTANT** – Use original Fluval Pond spare parts only
9. Place the Quartz Sleeve (C) and the two O-rings (D) back in their original position. It is recommended to lubricate the O-Rings with an inert lubricant.
   IMPORTANT – The Bulb Damper (Y) inside the quartz sleeve must be between the bulb and the bottom of the quartz sleeve. Do not remove it.
   IMPORTANT – The two O-rings (D) of the quartz sleeve (C) must be replaced every time the unit is opened.
10. Place the retaining flange (E) in its original position. Simply align the screw with the arrow and press the flange towards the UVC head, then turn the Retaining Flange approx 30 deg clockwise in the direction of the security screw (K). At this time fasten the Retaining Flange by screwing the security screw (K) **(Fig. 7 - Fig. 8 - Fig. 9)**.

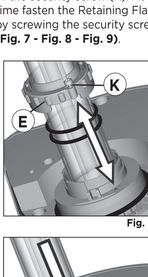

Fig. 7

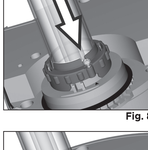

Fig. 8

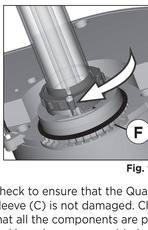

Fig. 9

11. Check to ensure that the Quartz Sleeve (C) is not damaged. Check that all the components are present and have been reassembled properly. If in doubt, consult your Fluval Pond dealer.
12. Put the UVC head (A) back on the filter lid (G), ensuring that the inner O-ring (F) is correctly located before securing the UVC head with the screws (J).
13. Secure the UVC head (A) to the filter lid by refitting the 4 anti-loss screws (J) on the UVC Head. WARNING – Risk of Electric Shock: Before powering the bulb, make sure that ALL O-Rings are back in their original position, ALL screws are tightened and there has not been any damage to the unit. Before connecting the unit to the power supply, perform the Filter Wet Test (see below).
14. The filter is now ready for start-up. Read and follow all instructions in Filter Start-up, Operation, and Backwash-Cleaning.

15. WINTER STORAGE

The unit must be protected from frost. In cold winter weather, the unit may be switched off. It should then be drained of water, removed from its installation and stored in a dry, weather-proof area. It is recommended to keep the unit lid open during storage.

16. FILTER WET TEST

Once the unit is fully assembled, it must be wet tested before connecting to the power supply. This test must be repeated whenever the bulb and the quartz sleeve are changed or disassembled.

1. Install the filter and connect it to the pump following all installation instructions. Do NOT switch on the filter. Switch on the pump only and let it run for 24 hours.
2. After 24 hours, switch off the pump and remove the UVC head (A) from filter by unscrewing the 4 screws (J). Do not disassemble more parts.
3. Inspect inside the quartz sleeve (C) for leaks. If you see water inside the quartz sleeve and around the bulb, do NOT connect the unit to power supply but take it to an authorized Fluval Pond dealer or contact Fluval Pond Customer Service.

17. CALCULATE THE SIZE OF YOUR POND

RECTANGULAR POND

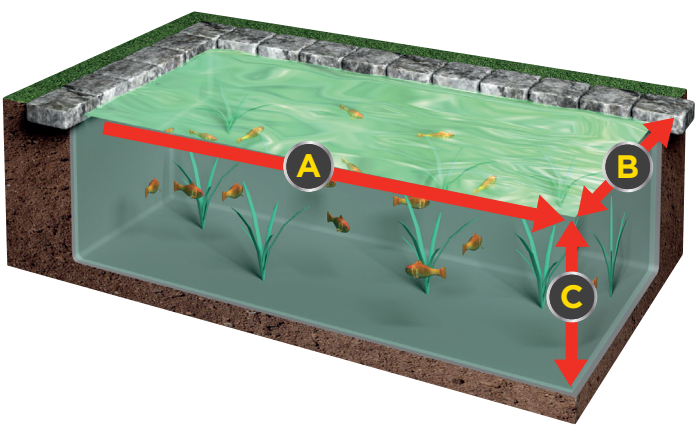

A (ft/pi) × B (ft/pi) × C (ft/pi) × 7.5 = TOTAL GAL

A (m) × B (m) × C (m) × 1000 = TOTAL L

CIRCULAR POND

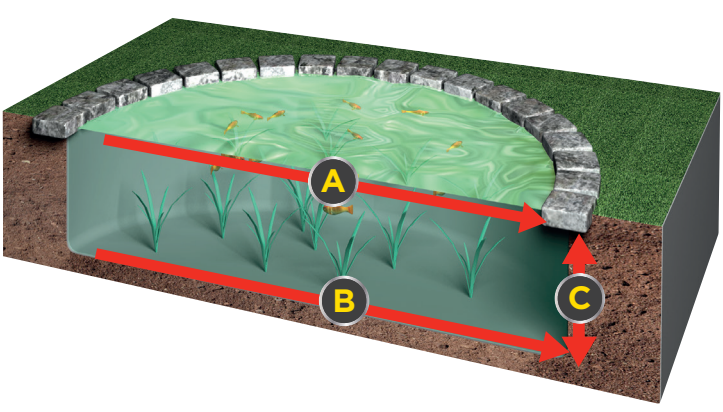

0.785 × A (ft/pi) × B (ft/pi) × C (ft/pi) × 7.5 = TOTAL GAL

0.785 × A (m) × B (m) × C (m) × 1000 = TOTAL L

18. HOW TO CHOOSE THE RIGHT PRESSURE-FLO FILTER FOR YOUR POND

Item Number	PT8350	PT8352
PRESSURE-FLO Filter For ponds up to	4500 L 1200 US Gal	8000 L 2100 US Gal
MAX-FLO Pump Recommended*	2400 LPH 700 GPH (PT8320)	5300 LPH 1500 GPH (PT8322)
Unit Size (Diameter x Height)	11″ x 14.25″ 28.3 x 36 cm	11″ x 20.5″ 28.3 x 52 cm
Canister Volume	10 L 2.6 US Gal	17.5 L 4.6 US Gal
UV Bulb	13W	13W
Foam		
BioLava	X	1600 g

Item Number	PT8354	PT8358
PRESSURE-FLO Filter For ponds up to	14000 L 3500 US Gal	21000 L 5000 US Gal
MAX-FLO Pump Recommended*	9000 LPH 2400 GPH (PT8324)	16500 LPH 4300 GPH (PT8328)
Unit Size (Diameter x Height)	15″ x 22″ 37.7 x 55.7 cm	15″ x 25.75″ 37.7 x 65.3 cm
Canister Volume	31 L 8.2 US Gal	40 L 10.6 US Gal
UV Bulb	24W	36W
Foam		
BioLava	3200 g	4800 g

*Recommendation based on an average fish load in partial sunlight. For heavy stocked ponds, or ponds in direct sunlight, use the next pump size up.

19. RECYCLING

This product bears the selective sorting symbol for waste electrical and electronic equipment (WEEE). This means that this product must be handled pursuant to European Directive 2012/19/EU in order to be recycled or dismantled to minimize its impact on the environment. Check with your local Environmental Agency for possible disposal instructions or take to an official council registered refuse collection point. **Electronic products not included in the selective sorting process are potentially dangerous for the environment and human health due to the presence of hazardous substances.**

20. FOR AUTHORIZED WARRANTY REPAIR SERVICE

QUESTIONS? If you have a problem or question about the operation of this product, please let us try to help you before you return the product to your dealer. Most problems can be handled promptly with a phone call. Or, if you prefer, you can contact us on our website at **www.fluvalaquatics.com.** When you call (or write), please have all relevant information, such as model number and/or part numbers available.

USA CALL US ON OUR TOLL-FREE NUMBER: 1-800-724-2436
between 9:00 a.m. and 4:00 p.m. Eastern Standard Time.
Ask for Customer Service.

CANADA CALL US ON OUR TOLL-FREE NUMBER: 1-800-554-2436
between 8:00 a.m. and 4:30 p.m. Eastern Standard Time. Ask for Customer Service.

UK Helpline Number 01977 521015.
Between 9:00 AM and 5:00 PM, Monday to Thursday and 9:00 AM and 4:00 PM on Friday (excluding Bank Holidays).

21. 3 YEAR WARRANTY

The Fluval Pond product is guaranteed for defective parts and workmanship for a period of 3 years from the date of purchase. This guarantee is valid with proof of purchase only. The guarantee is limited to repair or replacement only and does not cover consequential loss, loss or damage to livestock and personal property or damage to animate or inanimate objects, irrespective of the cause thereof. This guarantee is valid only under normal operating conditions for which the unit is intended. It excludes any damage caused by unreasonable use, negligence, improper installation, tampering, abuse or commercial use. The warranty does not cover wear and tear, breakage of glass or parts which have not been adequately or correctly maintained. **THIS DOES NOT AFFECT YOUR STATUTORY RIGHTS.**

BONUS +2 YEAR EXTENDED WARRANTY

LIMITED TIME OFFER! Register this product online within 30 days of purchase and Fluval will extend your current warranty at no charge. The extended warranty is subject to provisions outlined within the standard Fluval warranty. Complete details and registration available at:

FluvalAquatics.com/warranty

Made in Italy Ver.: 14/26-INT