FLUVAL POND

MAX-FLO

INSTRUCTION MANUAL

WATERFALL & FILTER PUMP

FOR FRESHWATER AND
SUBMERSIBLE USE ONLY

Table of Contents

1. IMPORTANT SAFETY INSTRUCTIONS.....3

2. WHAT'S INCLUDED.....4

1. SPECIFICATIONS.....4

3. GENERAL INFORMATION 5

4. INSTALLATION.....5

5. OPENING AND CLOSING THE PUMP CAGE 6

6. PUMP OPERATION 6

7. PUMP MAINTENANCE 6

8. CLEANING THE PUMP CAGE.....7

9. CLEANING THE PUMP MOTOR IMPELLER, IMPELLER WELL, AND IMPELLER COVER 7

10. MAX-FLO 700/2400 8

11. MAX-FLO 1500/5300 8

12. MAX-FLO 2400/9000, 3400/12600, AND 4300/16500 8

13. CLOSING THE PUMP CAGE.....9

14. TROUBLESHOOTING: LOW FLOW FROM PUMP.....9

15. TROUBLESHOOTING: NO FLOW FROM PUMP.....9

16. WINTERIZING THE PUMP 9

17. RECYCLING 10

18. FOR AUTHORIZED WARRANTY REPAIR SERVICE.....10

19. 3 YEAR WARRANTY 10

1. IMPORTANT SAFETY INSTRUCTIONS

WARNING - To guard against injury, basic precautions should be followed, including the following:

1. READ AND FOLLOW ALL SAFETY INSTRUCTIONS And all the important notices on the use and maintenance of this appliance. Disregarding this advice may result in damage to the appliance or personal injury.

- **DANGER** - To avoid possible electric shock, special care should be taken since water is employed in the use of pond equipment. For each of the following situations, do not attempt repairs yourself; return the appliance to the store where it was purchased if still under warranty:

- This is a weather-proof but NOT a submersible product. Do not immerse the product in water! If the appliance falls into the water, DON'T reach for it. First unplug it and then retrieve it.

2. Prior to installing the unit, check the quartz glass sleeve and the UVC lamp have not been damaged during transportation, as the UV lamp (B) and the quartz sleeve (C) are made of glass. Handle them with care. Do not handle UV lamp with bare hands as this will impede its performance.
   - If the appliance shows any sign of abnormal water leakage or if RCD (or GFCI Ground Fault Current Interrupter) switches off, disconnect the power supply cord from mains (main power supply).
   - Carefully examine the appliance after installation. It should not be plugged in if there is water on parts not intended to be wet. If electrical components of the appliance get wet, unplug the appliance immediately.
   - Do not operate any appliance if it has a damaged cord or plug, if it is malfunctioning or if it is dropped or damaged in any manner. If the power cord of this appliance is a special cord; if it is damaged, it must be replaced by an authorized Fluval Pond service facility or similar qualified person in order to avoid any hazard. Never cut the cord.
3. **WARNING** - This appliance contains a UVC emitter. Direct exposure to UVC can damage eyes and skin. Do not operate the UVC emitter when it is removed from the appliance enclosure.
4. **WARNING** - This appliance can be used by children aged from 8 years and above and persons with reduced physical, sensory or mental capabilities or lack of experience and knowledge if they have been given supervision or instruction concerning use of the appliance in a safe way and understand the hazards involved. Children shall not play with the appliance. Cleaning and user maintenance shall not be made by children without supervision.
5. To avoid injury, do not touch moving parts or hot parts.
6. **CAUTION** - Always unplug or disconnect all appliances in the pond from the electrical supply before placing hands in water, before putting on or taking off parts and while the equipment is being installed, maintained or handled. Never yank the cord to pull the plug from outlet. Grasp the plug and pull to disconnect. Always unplug an appliance from an outlet when not in use.
7. This is a filter unit complete with integrated UV clarifier for outdoor freshwater garden ponds. Do not use this appliance for other than its intended use. Unintended use of the appliance or damage to the housing may result in the escape of dangerous UVC radiation. UVC radiation may, even in little doses, cause harm to the eyes and skin.
   - Do not use this product in swimming pools or other situations where people are immersed;
   - This product is suitable for use in water temps from 4 °C to 35 °C;
   - Do not use this product with inflammable or drinkable liquids.
   - The use of attachments not recommended or sold by the appliance manufacturer may cause an unsafe condition and will void the manufacturer's warranty.
8. Do not install or store the appliance where it will be exposed to temperatures close to 0 °C (32 °F) or below. In freezing conditions, disconnect the power supply to the filter and drain water from the filter canister. In winter, remove and store the appliance in a sheltered place.
9. Shelter appliance also from direct sunlight. The materials have high stability to sunlight but direct rays may overheat and speed up aging.
   - To avoid overheating, do not place objects on the filter.
   - This product should not be placed where it can fall into the water. Do not install it in an area where flooding can occur or where water can accumulate. It should be placed at least 1 m/3.2 feet from the edge of the garden pond, in a dry and protected place, with sufficient ventilation around it. Be sure that there is enough room around it for maintenance operations.
10. **IMPORTANT** - The maximum operating pressure is 0.04 Mpa / 0.4 bar / 5.8 PSI with PF4500/8000; 0.05 Mpa / 0.5 bar / 7.3 PSI with PF 14000/21000. Do not connect power filter to the water mains.
11. Do not attempt to open the lid clamp (O) and lift the lid when the appliance and the filters are in operation. The lid clamp latch features a safety metal insert to prevent accidental opening.
12. If an extension cord is necessary, ensure connection is watertight and dust proof. A cord with proper rating should be used. A cord rated for less amperes or watts than the appliance rating may overheat. Care should be taken to ensure the cord will not be tripped over or pulled. The connection should be carried out by a qualified electrical installer.
13. **IMPORTANT** - Electrical connection must be in accordance with data on the rating label; the appliance can be operated only after having been correctly installed. The electrical safety is guaranteed only when the item is connected to a residual current device (RCD) or Ground Fault Circuit Interrupter (GFCI) having a rated residual operating current not exceeding 30 mA.
14. **WARNING** - Do not connect power to filter unless filter is fully and correctly assembled. Never use the product without water. The filter must always be fully filled with water when operating.
15. **WARNING** - Risk of electric shock **(SPECIAL INSTRUCTIONS FOR USA AND CANADA ONLY).** This appliance is equipped with a grounded, type 3-wire cord (3-prong plug). This plug will only fit into an electrical outlet made for a 3-prong plug. This is a safety feature. If the plug should fail to fit the outlet, contact an electrician to replace the outlet. Do not attempt to defeat the safety purpose of the grounding pin part of the 3-prong plug. Ensure that it is connected only to a properly grounded RCD or GFCI equipped receptacle rated at 30mA.

WARNING - Do not bury cord. Locate cord to minimize damage from lawn mowers, hedge trimmers and other equipment. Permanent installations to the main power supply (hard wiring), must comply with local authority regulations, which may stipulate the use of plastic or metal conduit to protect the cable.

For U.S.A. and CANADA only - To reduce the risk of electric shock, use only on portable self-contained fountains.

SPECIAL INSTRUCTION FOR U.K.:

IMPORTANT - This product is supplied without plug and is designed to be permanently wired to the mains supply; the connection must be made in a dry, weatherproof enclosure through the use of a double pole switched fused, incorporated in the fixed wiring in accordance with the wiring rules and having a contact separation in all poles that provided full disconnection under overvoltage category III, which complies to BS3676 fitted with a 3 amp fuse. The installation must conform to the regulations of the Local Electricity Authority which could include the use of plastic or metal conduit to protect the cable. A 30mA Residual Current Device (RCD) must be fitted to the mains supply.

WARNING: THIS APPLIANCE MUST BE EARTHED. IMPORTANT - The wires in the mains lead are coloured in accordance with the following code: BROWN-LIVE • BLUE-NEUTRAL • GREEN/YELLOW-EARTH

- The Brown lead should be connected to the live terminal, which may be marked with an 'L' or coloured brown or red.
- The Blue lead should be connected to the Neutral terminal, which may be marked with an 'N' or coloured blue or black.
- The Green/Yellow lead should be connected to the Earth terminal which may be marked with an 'E' or coloured green or yellow.
- The cord should be protected from abrasion, cuts or any other damage.

SAVE THESE INSTRUCTIONS FOR FUTURE REFERENCE

1. SPECIFICATIONS

SPECIFICATIONS	PT8320 **North America 120 V/60 Hz	PT8320 *Europe/UK 230-240 V/50 Hz	PT8322 **North America 120 V/60 Hz	PT8322 *Europe/UK 230-240 V/50 Hz
Maximum Flow Rate	2650 LPH 700 US GPH	2400 LPH	5680 LPH 1500 US GPH	5300 LPH
Maximum Head Height	6′3″ / 1.81 m		10′9″ / 3.3 m	
For Ponds Up To	4800 L 1400 US Gal		10600 L 3000 US Gal	
Click-Fit Outlet Diameter	¾″, 1″, 1 ¼″ 19, 25, 32 mm		¾″, 1″, 1 ¼″ 19, 25, 32 mm	
Wattage	34W		75W	65W
Amperage	0.45 A	0.225 A	1.25 A	0.47 A
Power Cord Length	16′ / 5 m	10 m	16′ / 5 m	10 m
Pump Output Diameter	25 mm		25 mm	
Solids Handling Size	6 mm		6 mm	

SPECIFICATIONS	PT8324 **North America 120 V/60 Hz	PT8324 *Europe/UK 230-240 V/50 Hz	PT8326 **North America 120 V/60 Hz	PT8326 *Europe/UK 230-240 V/50 Hz
Maximum Flow Rate	9085 LPH 2400 US GPH	9000 LPH	12900 LPH 3400 US GPH	12600 LPH
Maximum Head Height	12′ / 3.7 m		14′6″ / 4.3 m	
For Ponds Up To	18000 L 4800 US Gal		25200 L 6800 US Gal	
Click-Fit Outlet Diameter	1″, 1 ¼″, 1 ½″ 25, 32, 38 mm		1 ¼″, 1 ½″, 2″ 32, 38, 51 mm	
Wattage	84W	80W	130W	106W
Amperage	1.20 A	0.54 A	2.15 A	0.78 A
Power Cord Length	16′ / 5 m	10 m	16′ / 5 m	10 m
Pump Output Diameter	32 mm		38 mm	
Solids Handling Size	8 mm		10 mm	

SPECIFICATIONS	PT8328 **North America 120 V/60 Hz	PT8328 *Europe/UK 230-240 V/50 Hz
Maximum Flow Rate	16277 LPH 4300 US GPH	16500 LPH
Maximum Head Height	14′8″ / 4.7 m	
For Ponds Up To	33000 L 8600 US Gal	
Click-Fit Outlet Diameter	1 ¼″, 1 ½″, 2″ 32, 38, 51 mm	
Wattage	160W	
Amperage	3.20 A	1.43 A
Power Cord Length	16′ / 5 m	10 m
Pump Output Diameter	38 mm	
Solids Handling Size	10 mm	

2. WHAT'S INCLUDED

A Maintenance Tool

B Click-Fit Connector

C Ball Connector

D Pump

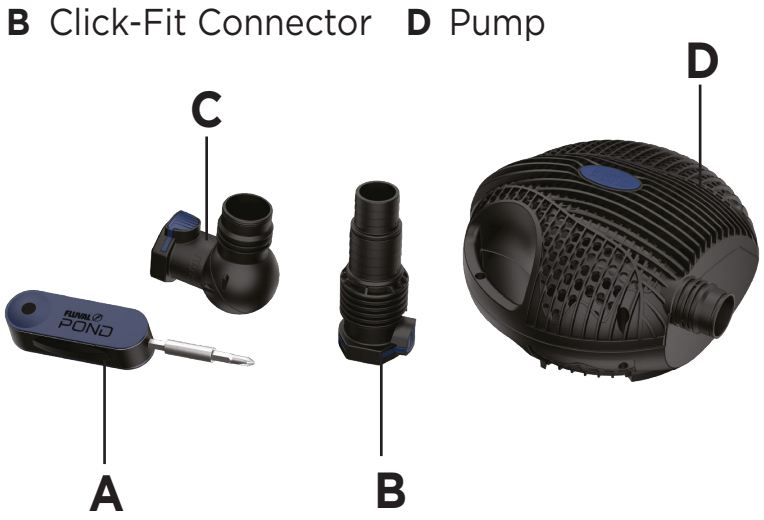

3. GENERAL INFORMATION

Because of their ability to process water moderately loaded with suspended solid particles (or solids), the Waterfall and Filter Pumps are ideal for use with filtration systems and for creating waterfalls and watercourses. The pumps are designed to transport suspended solids to suitable external filter systems (including pressurized filters) which then trap any debris that could potentially pollute pond water, effectively filtering the pond. The pumps are not suitable for supplying water to fountainheads, because the fountainhead jets could easily become clogged by solids processed by the pumps.

The pump motor sits inside a uniquely-shaped cage that is designed to allow the passage of solids up to a determined size only (from 6 mm to 10 mm depending on the model), as bigger solids may clog and damage the pump.

Max-Flo pumps must never be used without its cage. For improved operation, place the pump in the deepest part of the pond. At minimum, it must be placed at a depth of 8 inches or 20 cm. If necessary, you can secure the pump to a fixed base by using the keyhole-shaped slots, located at the bottom of the cage, which are shaped to allow the fast engaging/disengaging of the pump from the base. (Fig. 5) Use the template (Fig. 5A) to determine the exact position of the screws on the fixed base. Note that the base must be elevated, solid, and secure. Check that the information on the nameplate (which is located on the pump) corresponds to the power supply.

The electrical installation and wiring must comply with the safety standards in your area. If unsure, ask a qualified electrician to do the wiring. The electrical cord must be protected against any objects that may potentially damage it. The electrical receptacle/socket must be located in a dry, protected and easily accessible place.

WARNING: Always unplug or disconnect all appliances in the pond from the electrical supply before installing, repairing, maintaining or handling the equipment in the water.

IMPORTANT: To achieve the best pump operation, always use the largest bore hose possible. Avoid sharp bends in the hosing; gradual curves are preferred.

4. INSTALLATION

WARNING: Do not plug in the pump before it is correctly and fully installed.

1. Connect a flexible hose (not included) to the “Click-Fit” (B) coupling provided. If necessary, cut the coupling at the required size by using a small hack saw in order to allow the hose to fit properly and to achieve the best water flow.
2. Connect Click-Fit (B) to the Ball Connector (C).
3. Connect Ball Connector (C) to outlet of the pump (D) and insert the coupling, complete with hose attached to the outlet of the Ball Connector
4. Place the pump (A) in the pond ensuring that it is completely immersed in water and securely installed on a solid, level and elevated platform. If necessary, use the keyhole-shaped slots (Fig. 5) at the bottom of the pump to fasten it to a secure base (Fig. 5A).

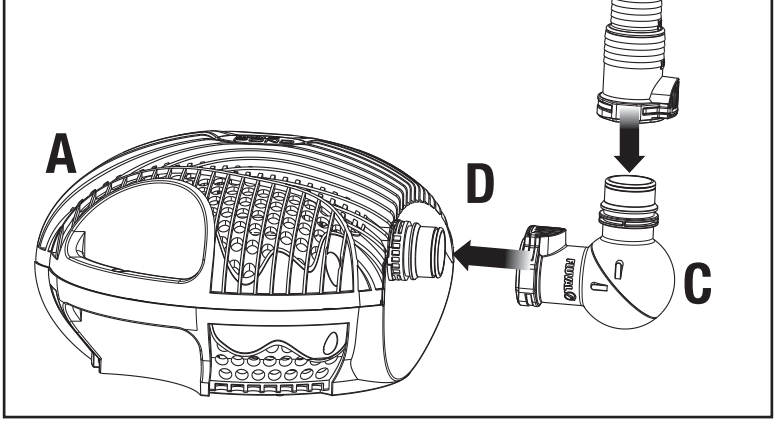

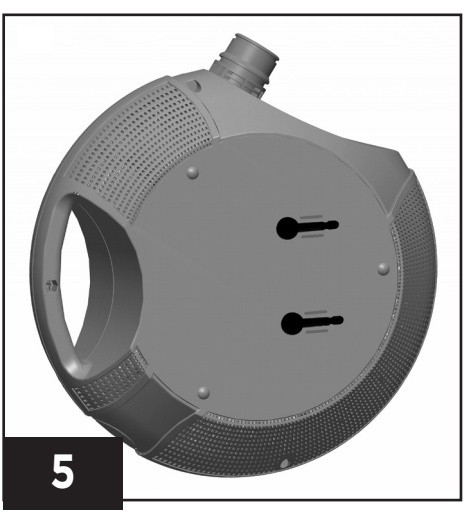

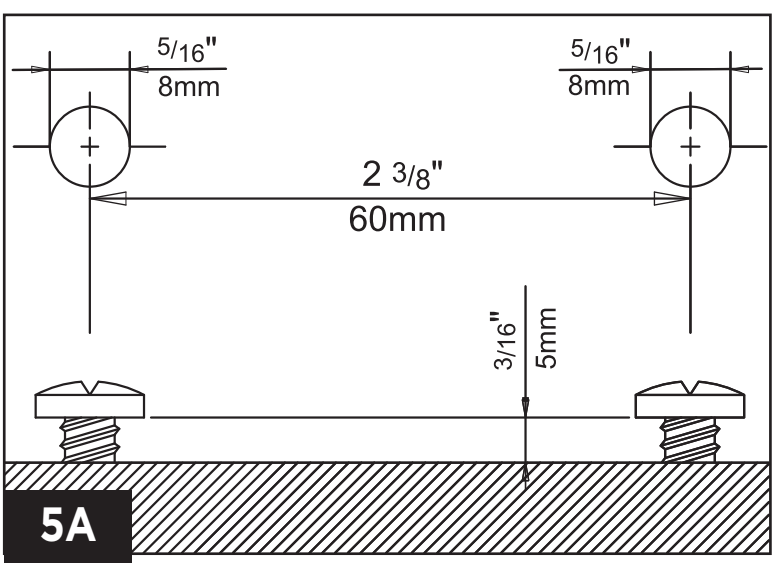

5. Connect the other end of the hose to a filter (not included) or waterfall according to your requirements.

Once the pump is fully installed, it can be started by inserting the plug in the electrical receptacle/socket.

5. OPENING AND CLOSING THE PUMP CAGE

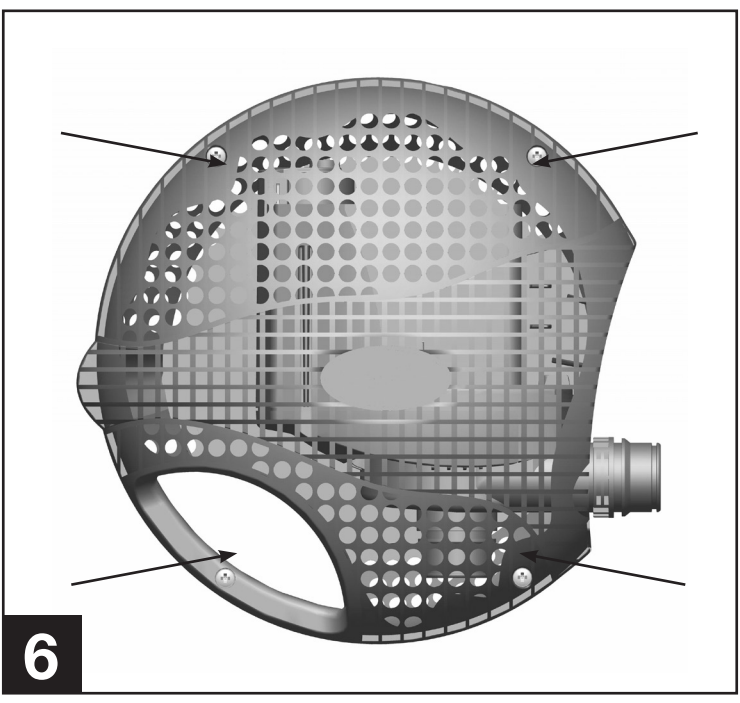

The upper and lower halves of the pump cage are fastened together by pivot pin fasteners. Using a standard flat screwdriver (5 mm to 8 mm), do the following:

To open the pump cage: Gently turn the fastener counterclockwise by ¼ to release the pin. To close the pump cage: Gently press on the fastener and turn clockwise by ¼ to lock the pin.

6. PUMP OPERATION

Once the pump is fully installed, it can be started by inserting the plug in the electrical receptacle/socket

7. PUMP MAINTENANCE

WARNING: Always unplug or disconnect all appliances in the pond from the electrical supply before installing, repairing, maintaining or handling the equipment in the water. To avoid shortening the life of the pump, follow these simple maintenance procedures:

- Once a week, verify that the pump performance is satisfactory. If you detect a drop in pump performance (such as a decrease in water flow from the pump or to the waterfall) first clean the Pump Cage and the hosing. If the water flow is still not fully restored to its original performance, clean the Impeller, Impeller Well and Impeller Cover (See Cleaning).
- The Pump Cage must be cleaned at least once a month.
- When necessary, or at least once a year, clean the pump motor completely (Impeller, Impeller Well, and Impeller Cover) and check that no limestone deposits, which could jeopardize pump operation, are present.
- To keep the pump in good working order, always replace any worn parts.
- The pump motor has no user serviceable parts. If the motor or the lectrical cord is damaged, discard the pump
- If you have any questions, consult your Fluval Pond retailer or call the appropriate customer service department listed at the end of this manual.

8. CLEANING THE PUMP CAGE

The main purpose of the Pump Cage is to keep the pump free of bigger solid particles (or solids) that could potentially clog the pump motor.

It is therefore normal that these solids progressively accumulate on the external surface of the cage and, with the passing of time, can diminish the performance of the pump, as evidenced by less water flow to the filter or waterfall. To clean the cage and restore the pump performance to its original level, proceed with one of the following: Without removing the pump from the pond, brush off the debris from the external surface of the cage using a broom or similar tool. For best results, brush the cage along the ribs.

- Remove the pump cage from the pond (never lift or hold the pump by its power cord), unlock the pivot pin fasteners **(Fig. 6)** and remove the upper half of the cage. Clean all components with streaming water from a garden hose. Reassembling all components with care. **Ensure that the pump cage is securely locked and the electrical cord is seated properly in position before lifting or operating the pump (see Closing the Pump Cage).**

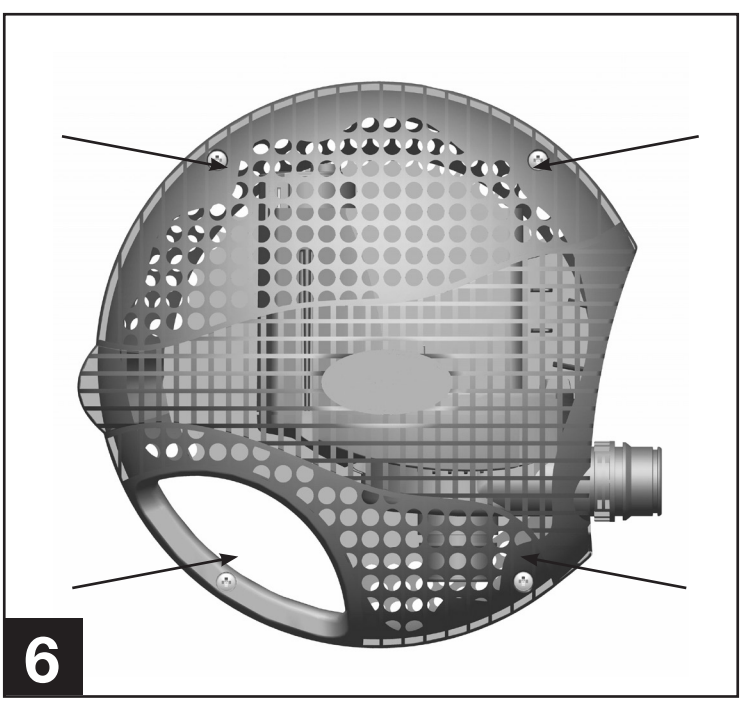

9. CLEANING THE PUMP MOTOR IMPELLER, IMPELLER WELL, AND IMPELLER COVER

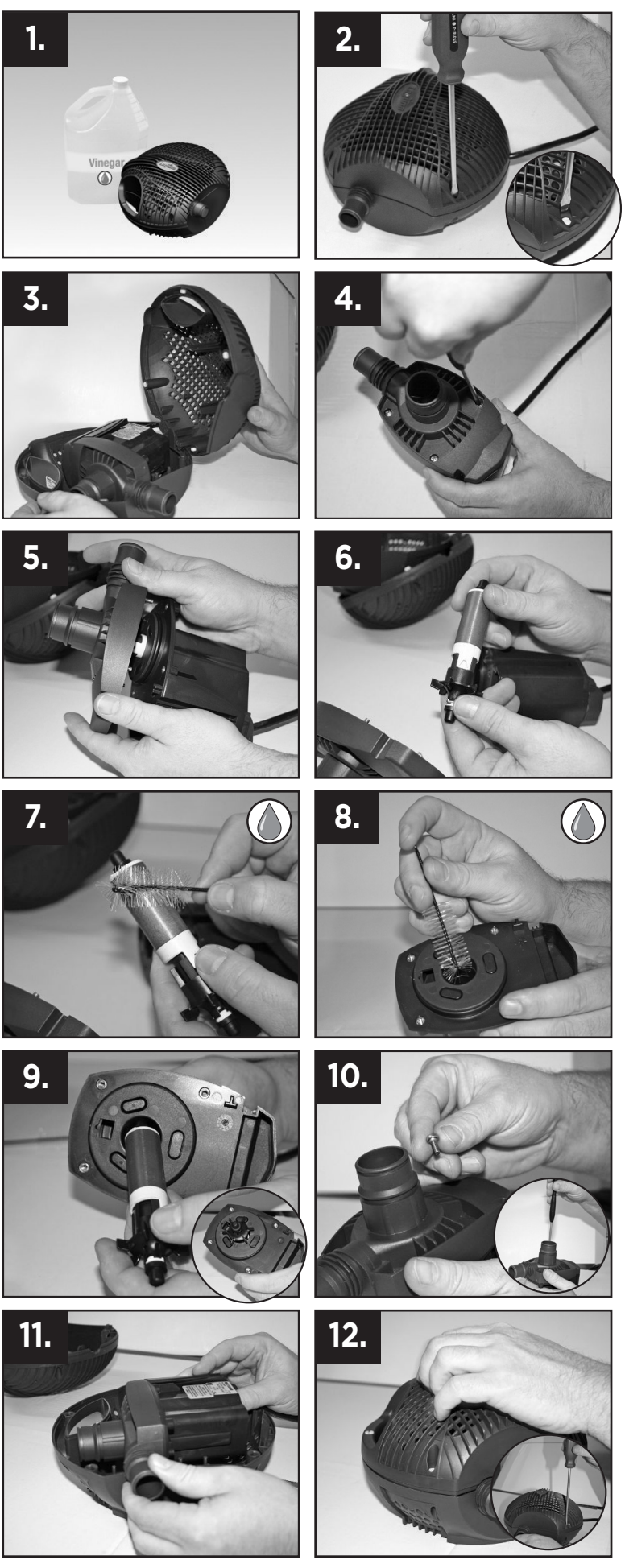

CAUTION: The pump motor includes a high-quality ceramic shaft that provides long-lasting, reliable performance when properly maintained. However, extreme care should be taken when handling the shaft during maintenance. Avoid dropping or pressing too hard on it to avoid breakage or hairline fractures, which may cause the shaft to snap while in operation.

Take the pump out of the pond, unlock the pivot pin **(Fig. 6)** fasteners and remove the upper half of the cage. Free the pump from the lower half of the cage. Proceed with the following cleaning instructions as per pump model:

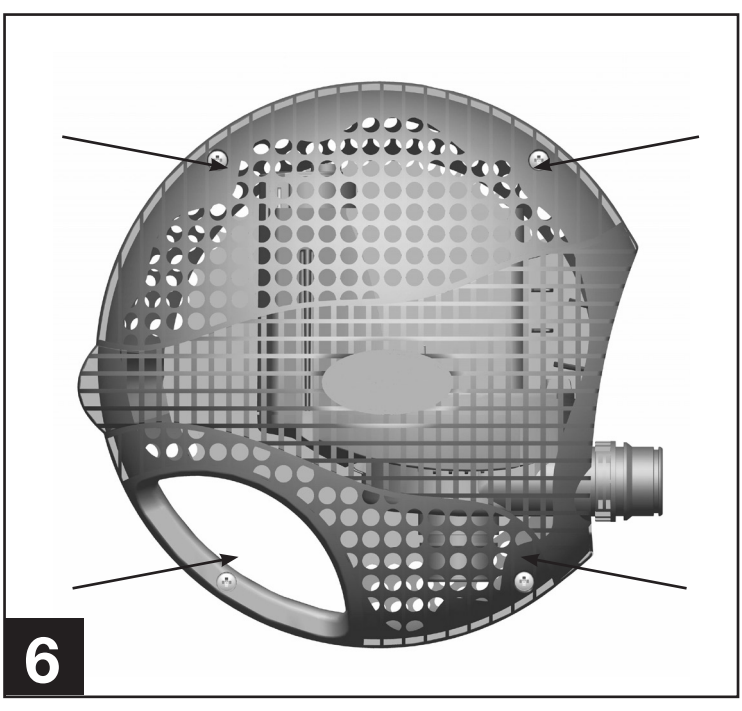

10. MAX-FLO 700/2400

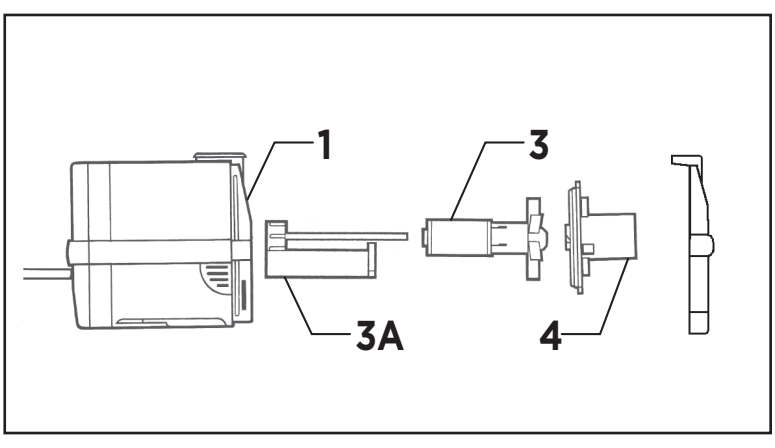

1. Remove the motor cover, then remove the impeller cover (4) by twisting and pulling it off.
2. Remove the impeller assembly (3).
3. If necessary, remove the impeller shaft (3A) using the tool provided (A-17015) **(Fig. 1A)**.

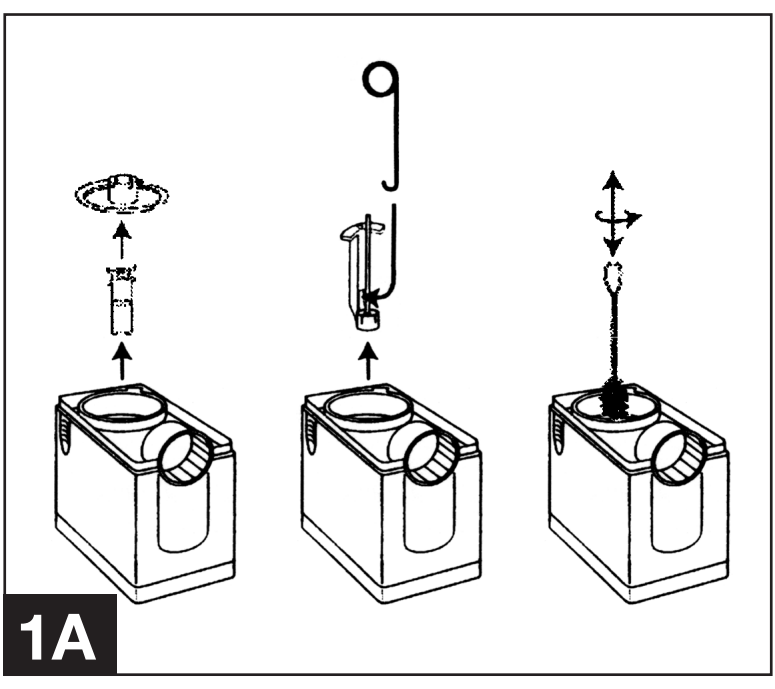

4. Clean all components in clean water only, using a small, nonabrasive brush, if necessary. DO NOT USE DETERGENTS OR OTHER CHEMICAL CLEANERS which could damage the pump and pollute the pond.
5. Reassemble all components with care **(see Closing the Pump Cage)**.

11. MAX-FLO 1500/5300

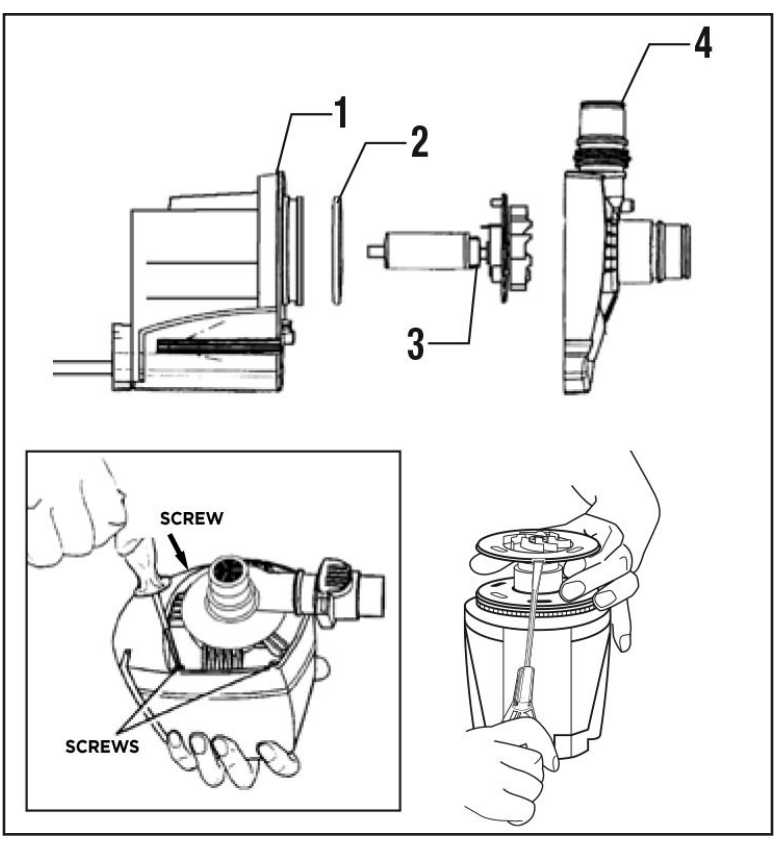

1. Using a Phillips (cross-headed) screwdriver, unscrew the three screws on the impeller cover (4) and remove it.
2. Remove the impeller assembly (3) by grasping the flange.
4. Reassemble all components with care (see Closing the Pump Cage), by first placing the impeller assembly and then the Seal Ring in their proper housing. Ensure that the impeller bearing, bushing and O-Ring are correctly placed at the bottom of the impeller well.

12. MAX-FLO 2400/9000, 3400/12600, AND 4300/16500

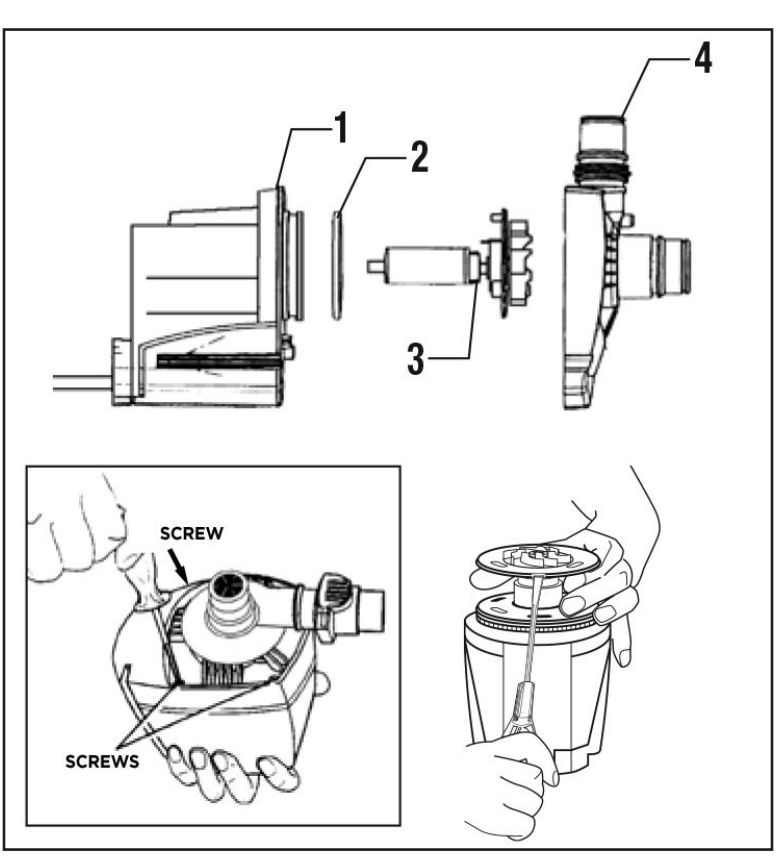

1. Using a Phillips (cross-headed) screwdriver, unscrew the four screws on the impeller cover (4) and remove it.
2. Using a flathead screwdriver, carefully lift out the impeller assembly.
3. Clean all components in clean water only, using a small, nonabrasive brush, if necessary. DO NOT USE DETERGENTS OR OTHER CHEMICAL CLEANERS which could damage the pump and pollute the pond.
4. Reassemble all components with care (see Closing the Pump Cage), ensuring that the impeller bearing, bushing and O-ring are correctly placed at the bottom of the impeller well.

For Max-Flo 1500/5300, 2400/9000, and 4300/16500 only.

Though the bushing is made of very resistant material, it is prone to wearing in certain conditions. For this reason, it is recommended that you replace it whenever the impeller unit is replaced. Follow the instructions provided with the replacement parts package. Once you have replaced the Bushing and O-Ring, reassemble all parts with care (see Fig. 3 & Closing the Pump Cage).

13. CLOSING THE PUMP CAGE

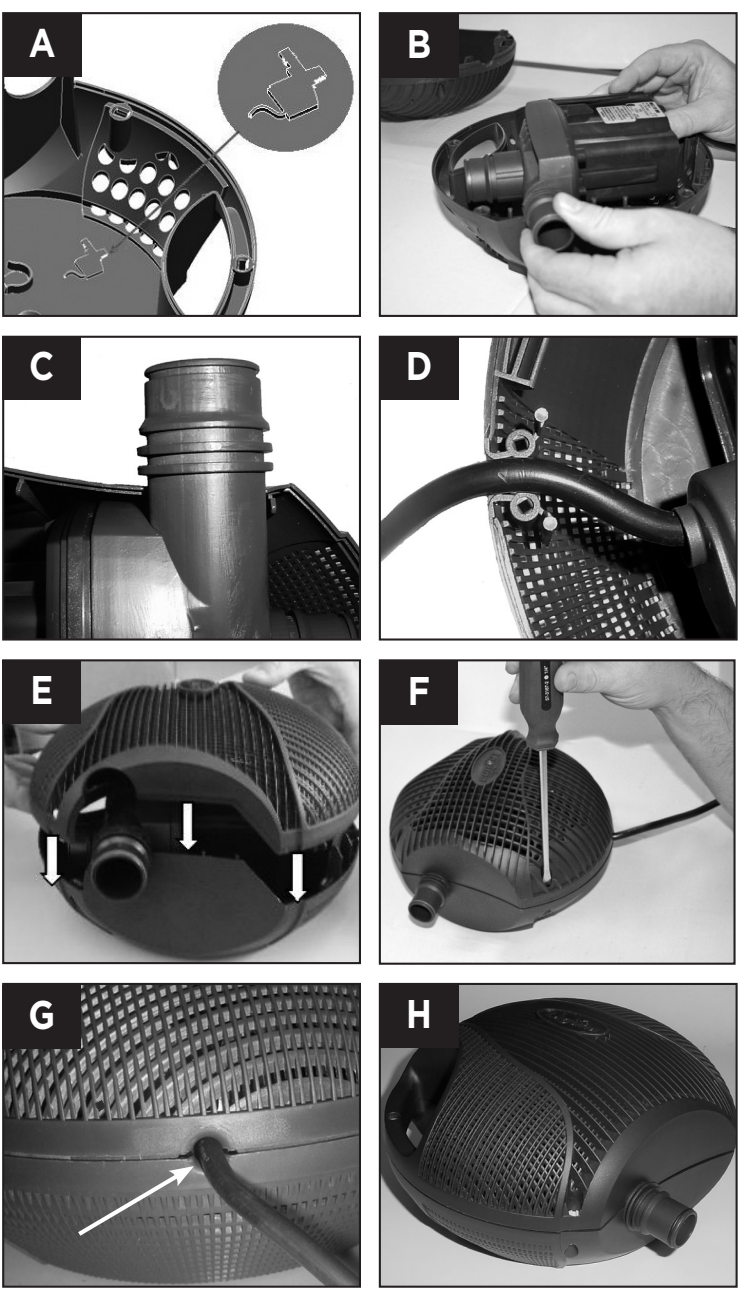

Place the pump inside the bottom half of the cage. Ensure that the pump is placed in the same direction as indicated on the pictogram on the inside bottom of the pump cage (A). Ensure that the electrical cord is properly seated inside the recess located on the bottom half of the cage. Close the cage completely, ensuring that both halves are fully aligned.

Lock the pivot pin fasteners as explained in section Opening and Closing the Pump Cage (D). Ensure that the pump cage is securely locked and the electrical cord is seated properly in position before lifting or operating the pump (G).

14. TROUBLESHOOTING: LOW FLOW FROM PUMP

- Check that the pump cage is clean.
- Check the hose for blockages.
- Check that the pump is free of dirt and debris.

15. TROUBLESHOOTING: NO FLOW FROM PUMP

- Check that the power supply is on.
- Check the fuse (UK market only) and wiring.
- Check that the plug is correctly connected to the electrical receptacle/socket.
- Check that the pump cage is clean.
- Check the hose for blockages.
- Check that the pump cage, holes, and pump are free from dirt, debris and/or any obstructions.
- Check that the pump is completely immersed in water.

16. WINTERIZING THE PUMP

1. Unplug and remove the pump from the pond.
2. Gently scrub off any dirt and debris with a soft nylon brush.
3. Open the cage by unlocking the pivot pin fasteners and remove the pump.
4. Thoroughly clean the pump and cage as per instructions in this manual.
5. In addition, soak the impeller shaft and impeller well in white vinegar for 24 hours, then rinse off with water. This procedure will remove calcium and other mineral deposits from the impeller shaft. If these deposits are not removed they may cause the shaft to bind and break when the pump is started again.
6. Lubricate all seals with Fluval Silicone Lubricant (sold separately).
7. Store indoors for best results. Do not store the pump in below freezing temperatures.
8. When re-opening your pond or water feature in the spring, submerge the pump in the pond for 1 hour prior to starting the pump.

17. RECYCLING

This product bears the selective sorting symbol for waste electrical and electronic equipment (WEEE). This means that this product must be handled pursuant to European Directive 2012/19/EU in order to be recycled or dismantled to minimize its impact on the environment. Check with your local Environmental Agency for possible disposal instructions or take to an official council registered refuse collection point. **Electronic products not included in the selective sorting process are potentially dangerous for the environment and human health due to the presence of hazardous substances.**

18. FOR AUTHORIZED WARRANTY REPAIR SERVICE

QUESTIONS? If you have a problem or question about the operation of this product, please let us try to help you before you return the product to your dealer. Most problems can be handled promptly with a phone call. Or, if you prefer, you can contact us on our website at **www.fluvalaquatics.com.** When you call (or write), please have all relevant information, such as model number and/or part numbers available.

USA CALL US ON OUR TOLL-FREE NUMBER: 1-800-724-2436
between 9:00 a.m. and 4:00 p.m. Eastern Standard Time.
Ask for Customer Service.

CANADA CALL US ON OUR TOLL-FREE NUMBER: 1-800-554-2436
between 8:00 a.m. and 4:30 p.m. Eastern Standard Time. Ask for Customer Service.

UK Helpline Number 01977 521015.
Between 9:00 AM and 5:00 PM, Monday to Thursday and 9:00 AM and 4:00 PM on Friday (excluding Bank Holidays).

19. 3 YEAR WARRANTY

The Fluval Pond product is guaranteed for defective parts and workmanship for a period of 3 years from the date of purchase. This guarantee is valid with proof of purchase only. The guarantee is limited to repair or replacement only and does not cover consequential loss, loss or damage to livestock and personal property or damage to animate or inanimate objects, irrespective of the cause thereof. This guarantee is valid only under normal operating conditions for which the unit is intended. It excludes any damage caused by unreasonable use, negligence, improper installation, tampering, abuse or commercial use. The warranty does not cover wear and tear, breakage of glass or parts which have not been adequately or correctly maintained. **THIS DOES NOT AFFECT YOUR STATUTORY RIGHTS.**

BONUS +2 YEAR EXTENDED WARRANTY

LIMITED TIME OFFER! Register this product online within 30 days of purchase and Fluval will extend your current warranty at no charge. The extended warranty is subject to provisions outlined within the standard Fluval warranty. Complete details and registration available at:

FluvalAquatics.com/warranty

Made in Italy Ver.: 14/26-INT